FURUNO

INSTALLATION MANUAL

SSB REMOTE STATION

MODEL RB-500

(For ROM Version No. 1.04 (Standard)
1.00 (Option))

FURUNO ELECTRIC CO., LTD.
NISHINOMIYA, JAPAN

©FURUNO ELECTRIC CO., LTD.

9-52, Ashihara-cho,
Nishinomiya, Japan 662

Telephone: 0798-65-2111
Telefax: 0798-65-4200

·Your Local Agent/Dealer

FIRST EDITION : FEB 1993
E : JUN. 4, 1999

PUB. No. IME-50700-E
(TENI) RB-500

0008056530 0

⚠ SAFETY INSTRUCTIONS

"**DANGER**", "**WARNING**" and "**CAUTION**" notices appear throughout this manual. It is the responsibility of the installer of the equipment to read, understand and follow these notices. If you have any questions regarding these safety instructions, please contact a FURUNO agent or dealer.

⚠ **DANGER**	This notice indicates a potentially hazardous situation which, if not avoided, will result in death or serious injury.
⚠ **WARNING**	This notice indicates a potentially hazardous situation which, if not avoided, could result in death or serious injury.
⚠ **CAUTION**	This notice indicates a potentially hazardous situation which, if not avoided, could result in minor or moderate injury, or property damage.

SAFETY INFORMATION FOR THE INSTALLER

⚠ WARNING

Only qualified personnel should work inside the equipment.

This equipment uses high voltage electricity which can shock, burn, or cause death.

Turn off the power at the ship's mains switchboard before beginning the installation. Post a warning sign near the switchboard to ensure that the power will not be applied while the equipment is being installed.

Serious injury or death can result if the power is not turned off, or is applied while the equipment is being installed.

⚠ CAUTION

Ground the equipment.

Ungrounded equipment can give off or receive electro-magnetic interference or cause electrical shock.

Confirm that the power supply voltage is compatible with the voltage rating of the equipment.

Connection to the wrong power supply can cause fire or equipment damage. The voltage rating appears on the label at the rear of the equipment.

Observe the compss safe distances to prevent deviation of a magnetic compass.

Standard Compass 0.8 m
Steering Compass 0.6 m

Table of Contents

REPLACEMENT OF ROM FOR CONNECTION TO RADIO CONSOLE (RC-808 Series)

Replace the standard ROM on the MAIN board with the optional ROM for the RC-808 series.

Optional ROM Program No.: 0550160100

Code No.: 005-941-910-00

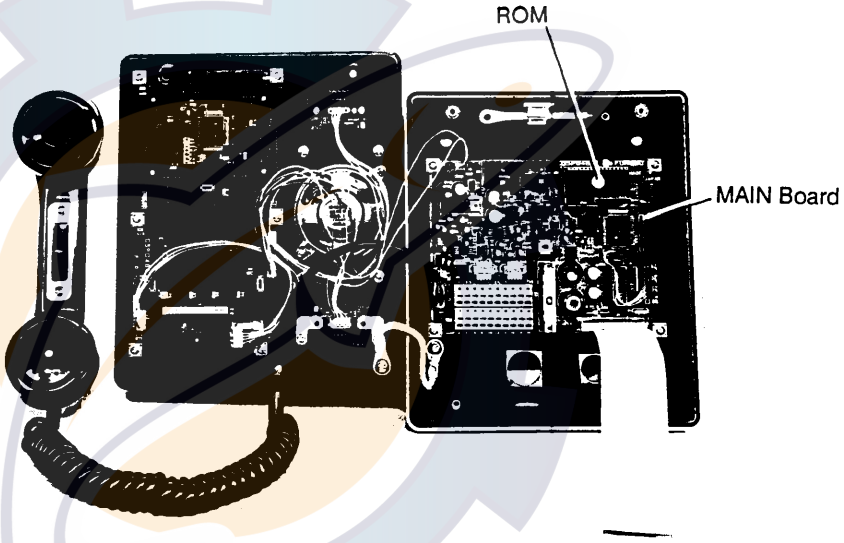

T Photo No.1201

MODIFICATION FOR CONNECTION TO FS-5000/8000

The different modification is required depending on the suffix no. of AF board.
For suffix no. -22 and before, see below.
For suffix no. -33 and after, see the next page.

For AF board having suffix no. -22 and before, the following modification is required.

Reason

The FS-5000/8000 radiotelephone outputs +18V for the RB-500 which operates on +12V. Therefore, reduce the +18V from the FS-5000/8000 to +12V through the resistor shown below.

Note that this modification is not required if the RB-500 is connected to the FS-5000/8000 via the DB-500.

Necessary Parts

Metal film resistor 4.7 ohms, 3W
(Type: ERX3SJ4R7P, Code No.: 000-375-509)

Modification

1) Remove L4 on the MAIN board (05P0483) and install a resistor at the same place.

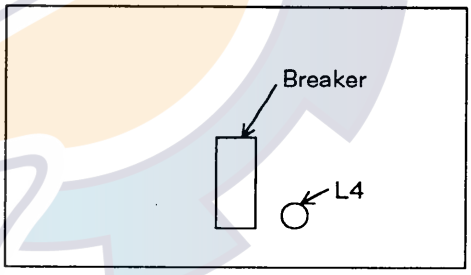

MAIN Board

2) Change system setting 9933 to "0" (MIF) on the FS-5000/8000 as follows.

- **STO** → 9933 → **ENT** → 0 (MIF) → **ENT**

For AF board having suffix no. -33 and after, the following modification is required.

The AF board having suffix no. -33 and after is delivered from August 1993.
Note that when RS-232C format is used between FS-5000/8000 and DB-500, this modification is not required.

Signal Format

Current Loop or RS-232C format can be selected by changing a jumper wire setting on the AF board having suffix no. -33 and after.

Factory setting

RS-232C format is selected at the factory.

Modification

Put a jumper wire for current loop format.

Jumper Wire	Signal Format
short	Current Loop
open (factory setting)	RS-232C

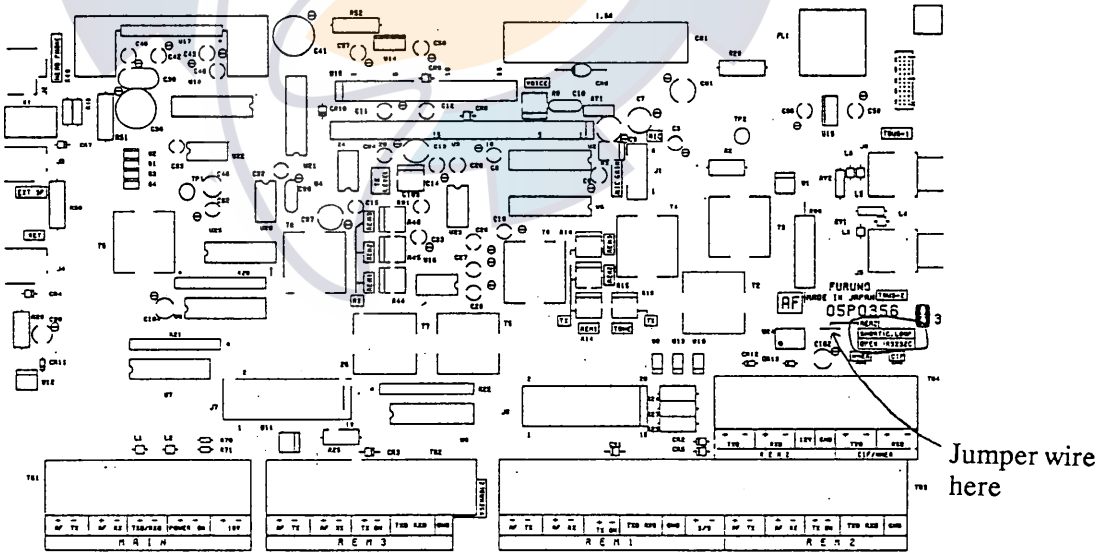

AF Board 05P0356-33

REMARKS ON CONNECTION TO FS-1502

Overview

When connecting the RB-500 to the FS-1502, install the optional board (REMOTE-B board, 05P0458) in the FS-1502. It is supplied as the "REMOTE-B Assembly (OP05-40)", consisting of the REMOTE-B board and the connector assembly.

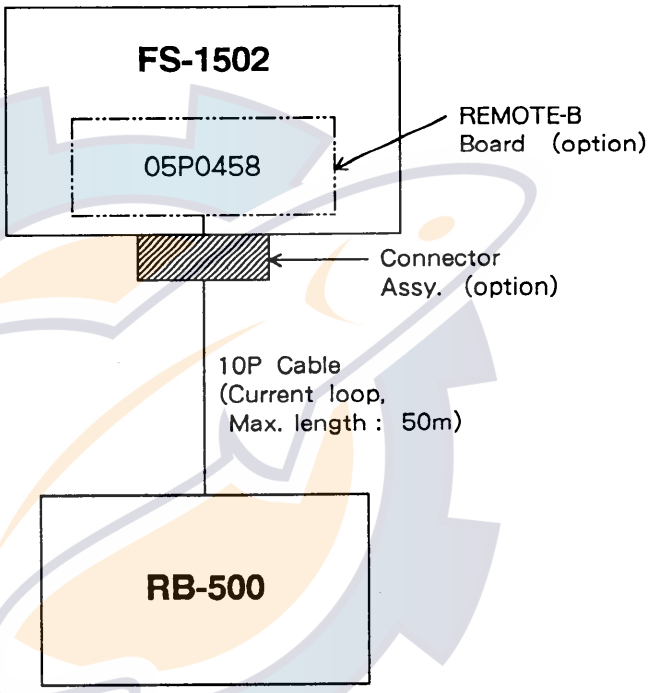

REMARKS ON CONNECTION TO FS-1552/1562

Overview

For the FS-1562, the REMOTE-A board on the TX/RX board is replaced with the REMOTE-B Board (05P0458: 005-517-500). For the FS-1552, REMOTE-B Kit (OP05-40: 005-920-320) is mounted.
If more than two RB-500s are to be installed, connect them via the Distributor DB-500. Refer to pages S-7 and S-8 for connections.

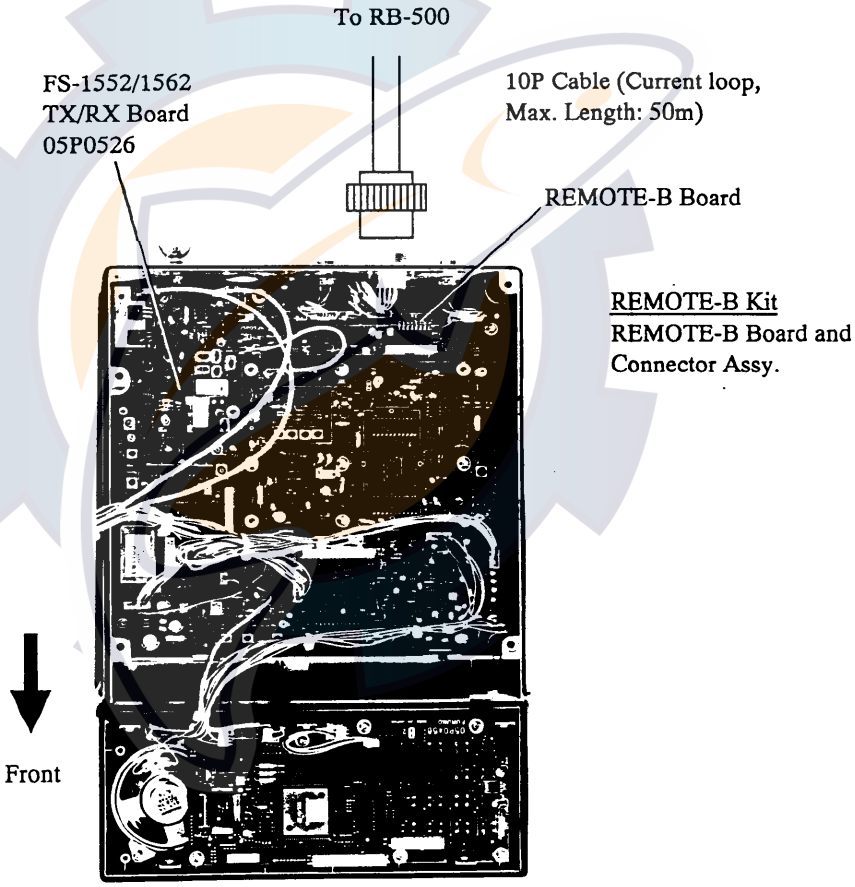

INSTALLATION

This chapter provides general guidelines for the mounting of this unit. For detailed instructions see page D-3. Installation consists mainly of mounting the unit and connecting it to the SSB radiotelephone.

For GMDSS vessels, be sure to secure sufficient space for GMDSS equipment; Distress Message Controller, etc.

Mounting Location

The RB-500 can be mounted on a tabletop, a bulkhead, or in a console (flush mount or semi-flush mount). When selecting a mounting location keep the following points in mind.

- Select a location where the controls and handset can be easily operated and do not interfere with other equipment.
- Select a location free of water splash and rain.
- Select a location where the temperature and humidity are moderate and stable.
- Select a location which is well ventilated.
- Locate the unit well away from air conditioners and exhaust vents.
- Select a location where vibration is minimal.
- The magnet in the handset will affect magnetic gyrocompass performance. Separate the RB-500 from the magnetic gyrocompass by at least the distances shown in table 1.

Table 1 Compass safe distances

Standard Compass	Steering Compass
0.8 m	0.6 m

- For flush mounting, determine the cable entrance location before installing the unit.

Mounting

Cable gland (Cord lock) location

The MIF cable (interconnection cable) can be led into the RB-500 in one of four methods. See page D-3. If the cable lead-in location is changed later, be sure to cover the open cable glands with the seals provided.

Opening the unit

1. Remove the fixing screw covers (2 pcs.) and loosen four fixing screws to open the cover. Be careful not to damage wiring when opening the cover.
2. Disconnect wires and cables on the MAIN board.

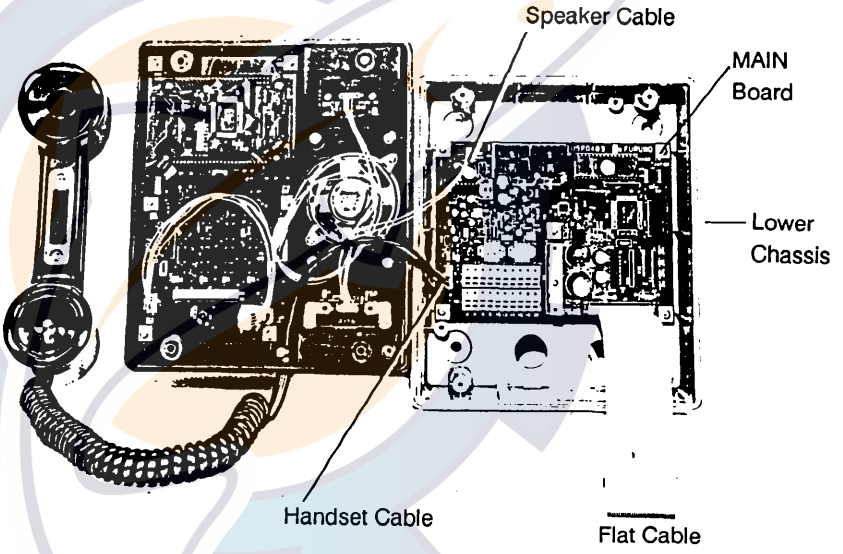

Figure 1 RB-500, cover opened

Flush mounting

The unit can be flush mounted (or semi-flush mounted) in a console. Prepare a cutout in the mounting location by consulting the outline drawing on page D-2.

Fixing the unit

Fix the unit to the mounting location with the seal washers and tapping screws (supplied).

Connections

Fixing the MIF cable (10P)

For armored cable;

1. Determine cable length and remove a suitable amount of the armor.
2. Waterproof the cable at the cable gland.
3. Lead in the cable to the RB-500.
4. Fix the cable with the hose clamp supplied in the installation materials.

Hose clamp

A hose clamp is provided with the unit for fixing the MIF cable, inside the unit.

Processing the cable shield

To process the cable shield of armored cable;

1. Fold back the shield.
2. Solder an earth wire to the cable and connect the wire to the #5 terminal (F-GND) of TB1.
3. Fix cable with hose clamp.

Connection of MIF cable

1. Determine length of wires considering their locations on the terminal board.
2. Expose cores by about 5 mm.
3. Referring to the interconnection diagram, connect cores to terminal board, using the terminal opener attached inside the unit.

Fixing of the front panel

To fix the front panel;

1. Connect connectors.
2. Close unit. Be sure no foreign material is adhering to the rubber gasket before closing the unit.
3. Tighten fixing screws.
4. Replace fixing screw covers.

Earth

Tabletop or bulkhead mounting

Install a copper strap between the wall and the lower chassis and fix it with case fixing screws. Fix the other end of the strap to the nearest grounding point on the ship's hull.

Flush mounting

Fix a copper strap underneath the lower chassis and connect it to the nearest grounding point on the ship's hull.

Initial Settings

Jumper settings

Before or after fixing the RB-500, make the initial settings if necessary.

Jumper	Function	Open	Short
1 6	Setting of remote station number (used for intercom operation)	JP1 / JP6 / Remote station No. Short / Short / 1 Open / Short / 2 Short / Open / 3 (Factory setting) Open / Open / 4	
4	Chass of emission on 2182kHz & ITU channel	J3E, USA CH	J3E, standard ITU CH (Factory setting)
5	Radio status on LCD (ROM ver.107 and after of FS-1562 only)	always monitor	radio status when off hook (Factory setting)

■ **NOTE:** *JP2 and JP3 should be used only for factory adjustment. Do not change these jumper settings in the field.*

• Parts location of JP4 and JP5

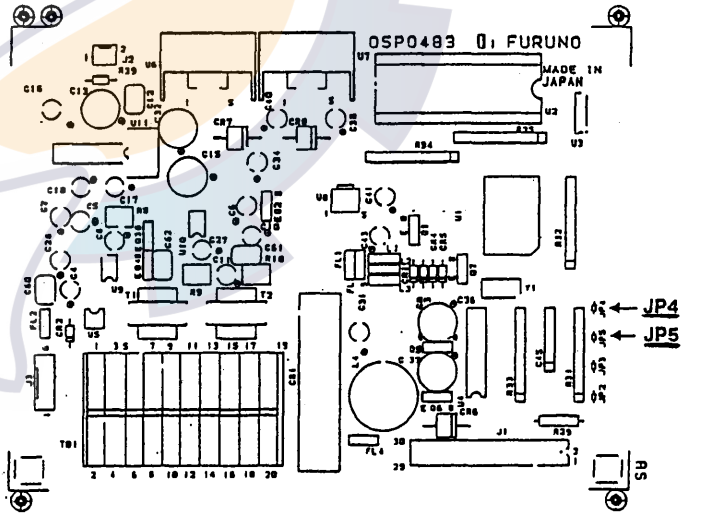

MAIN board (Parts side)

- Parts location of JP1 and JP6

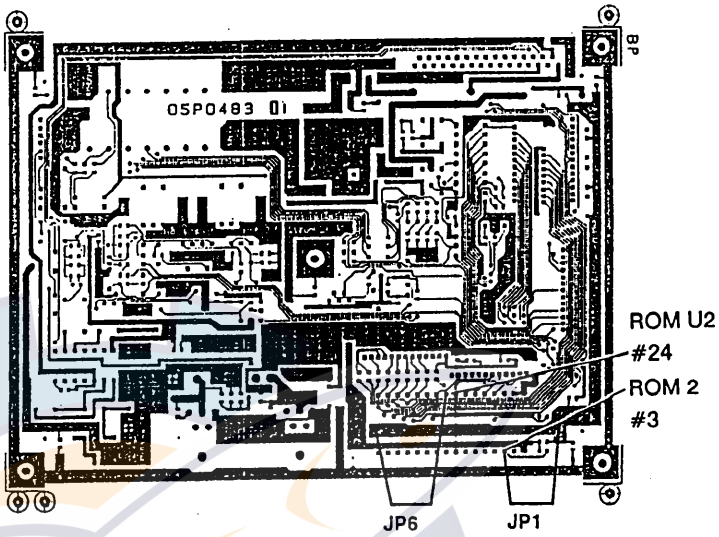

MAIN board (Soldering side)

Confirmation of jumper settings

- To confirm the jumper settings of JP1 and JP6, turn on the power while pressing and holding down the **ENT** key.

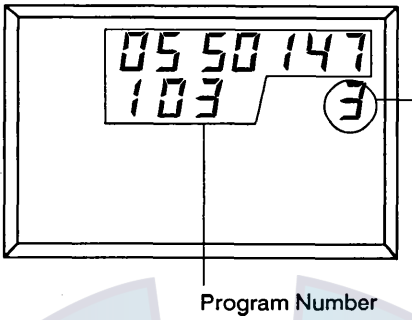

No.	JP1	JP6
1	Short	Short
2	Open	Short
3	Short	Open
4	Open	Open

- To confirm the jumper settings of JP4 and JP5, turn on the power while pressing and holding down the **HOOK** key.

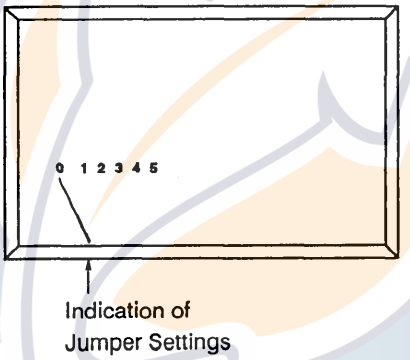

No.	JP4	JP5
0	Short	Short
1	Open	Short
2	Short	Open
3	Open	Open

Adjustments

Speaker volume

Adjust R18 to select desired speaker volume. Adjust it with the **VOLUME** control on the front panel set for maximum, so a signal can be heard clearly at all levels of volume.

Handset speaker volume

Adjust R9 to select desired handset speaker volume.

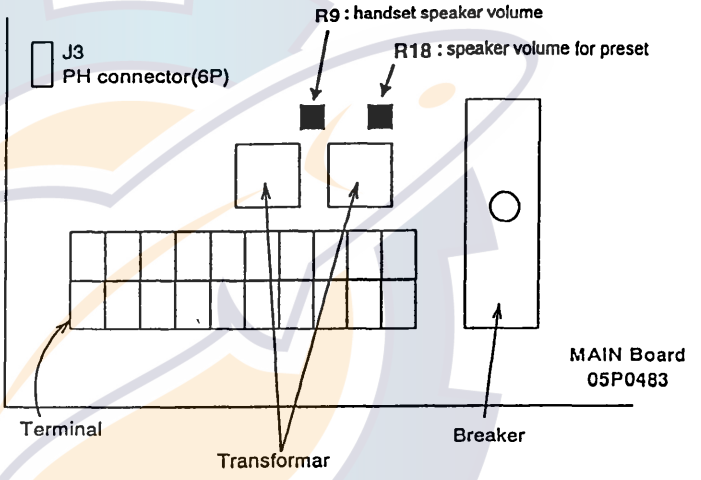

Figure 2 MAIN board, showing location of presets for adjustment of speaker and handset speaker volume

SPECIFICATIONS

The RB-500 provides for remote control of a FURUNO SSB radiotelephone equipped with FURUNO MIF radio interface.

Connection	FS-1502/1552 (optional Remote-B kit required) FS-1562 (optional Remote-B board required) FS-5000/FS-8000 (modification required) RC-808-2T/RC-808-3T radio console (optional ROM required)
Control	Channel Frequency Class of emission Rf output power Squelch on and off (FS-5000/8000 equipped with AF board 05P0356-33 and after) Sweeping Scanning Antenna coupler tuning Intercom (FS-1502/1552/1562, FS-5000/8000 equipped with AF board 05P0356-33 and after)
Display	LCD
Audio Output	Internal speaker: 1 W min. (8 ohms) External speaker: 1 W min. (8 ohms) Handset speaker: 1 mW min. (200 ohms), max. better than 10 mW
Line I/O	0 dBm, 600 ohms
Handset Input	-46 dBm (600 ohms)
Communications Interface	MIF (FURUNO radio interface); current loop
MIF Cable Length	50 m max.
Dimensions and Weight	190 (W) × 75 (H) × 220 (D) mm, 2.5 kg
Environmental Conditions	Temperature: -20°C to +55°C Relative Humidity: 93% at +40°C Splashproof construction: Meets JIS (Japan Industrial Standard) C 0920
Power Supply	12 VDC +30%, -10% (floating ground), less than 1A, supplied from SSB radiotelephone or Distributor DB-500

Complete Set

Complete Set

No.	Name	Type	Wt.	Q'ty	Remarks
1	Remote Station	RB-500	2.5kg	1	
2	Installation Materials			1 set	
3	Interconnection Cable	CO-SPEVV-SB-C 0.2 × 10P			5/10/20/30/40/50m, option
4	Flush Mount Panel	OP05-46			2.5GY5/1.5, option
		OP05-47			7.5BG7/2, option
		OP05-50			2.5G7/2, option

Installation Materials

Type: CP05-04700, Code No. 000-054-515

番号 No.	名称 NAME	略図 OUTLINE	型名／規格 DESCRIPTIONS	数量 Q'TY
1	シールワッシャ SEAL WASHER		W5-SUS CODE NO. 000-800-870	4
2	+トラスタッピングネジ TAPPING SCREW	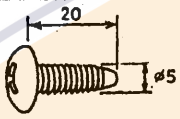	5X20 1種 SUS304 CODE NO. 000-802-081	4
3	ワイヤー型ホースバンド HOSE CLAMP	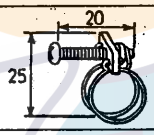	TM-145SS NO.14 CODE NO. 000-803-129	1
4	コードロック CORD LOCK	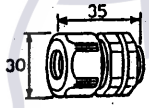	SCL-14A CODE NO. 000-111-305	1
5	フタ PLASTIC SEAL	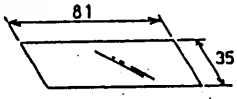	05-055-0009-2 CODE NO. 100-156-552	1
6	銀シール ALUMINUM SEAL	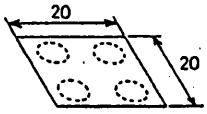	05-055-0029-1 CODE NO. 100-162-501	1

FURUNO

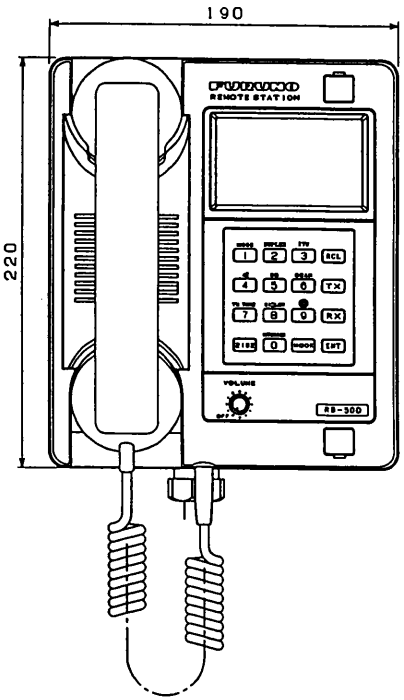

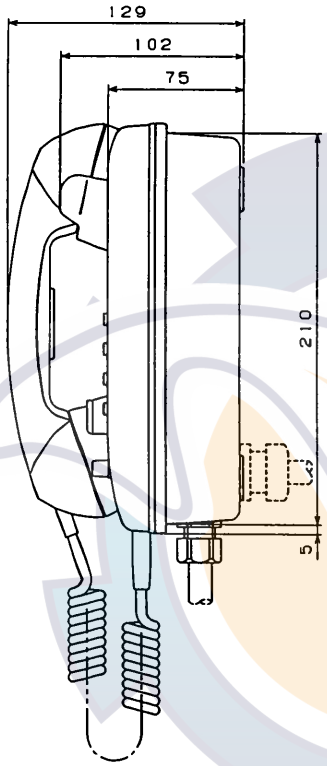

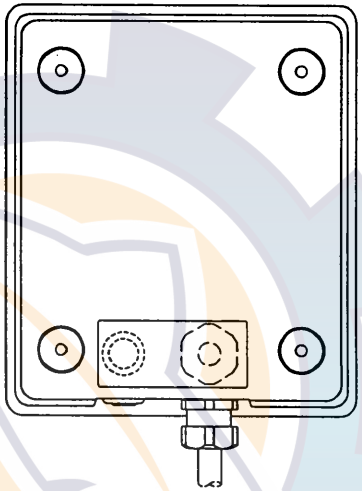

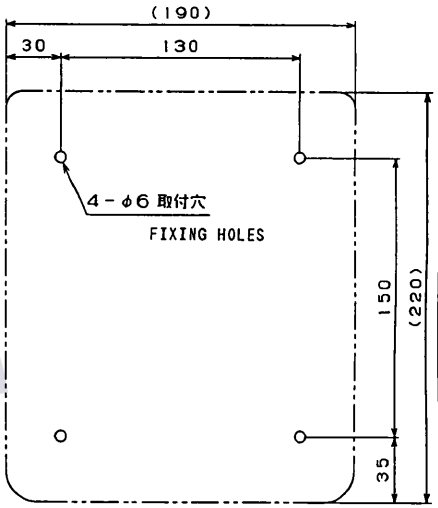

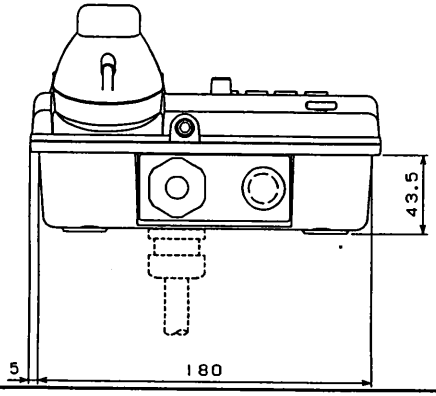

		品番 ITEM	品名 NAME	材質 MATERIAL	数量 Q'TY	図番 DWG.NO.	備考 REMARKS
承認 APPROVED	OCT・2・'91 T.NAKANO	三角法 THIRD ANGLE PROJECTION		名称 TITLE	RB-500	リモートステーション (壁掛型) REMOTE STATION (BULKHEAD MOUNT)	
検図 CHECKED	OCT・2・'91 M.IKEDA	R度 SCALE	:				
製図 DRAWN	OCT・2・'91 M. OSAKO	重量 WEIGHT	2.5 kg	図番 DWG.NO.	C5070-G01-B		

FURUNO ELECTRIC CO., LTD.

D-1

FURUNO

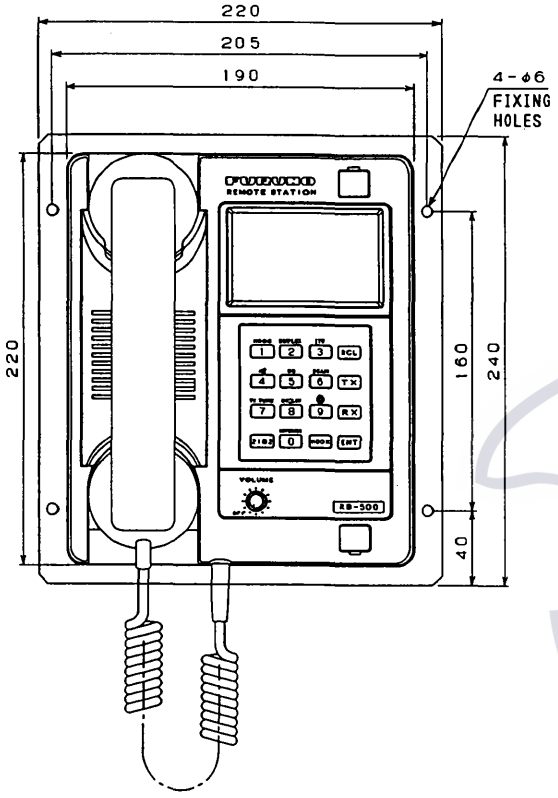

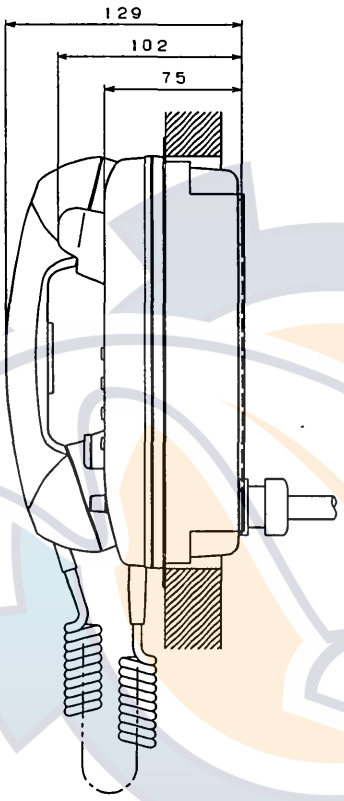

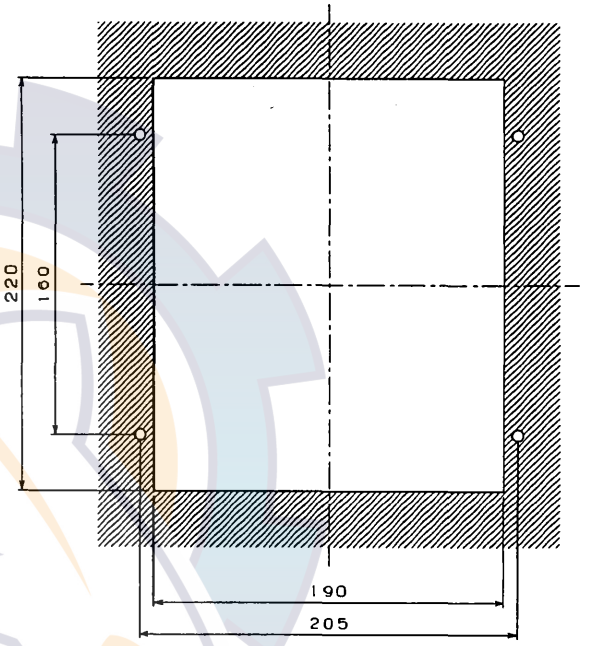

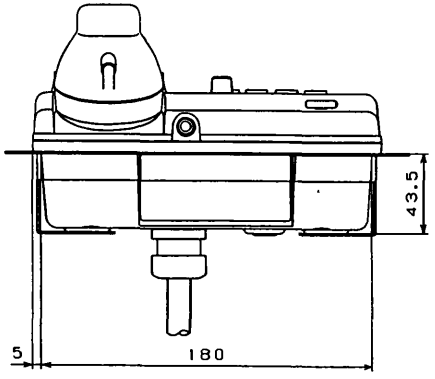

		品番 ITEM	品名 NAME	材質 MATERIAL	数量 Q'TY	図番 DWG.NO.	備考 REMARKS
承認 APPROVED	OCT・2・'91 T.NAKAJO	三角法 THIRD ANGLE PROJECTION		名称 TITLE RB-500	リモートステーション (埋込型) REMOTE STATION (FLUSH MOUNT)		
検図 CHECKED	OCT・2・'91 M.IKEDA	R度 SCALE	-				
製図 DRAWN	OCT・2・'91 H.OSAKO	重量 WEIGHT	2.5 kg	図番 DWG.NO.	C5070-G02-B		

FURUNO ELECTRIC CO., LTD.

D-2

FURUNO

SELECTION OF CABLE ENTRANCE (4 types)

Ⓐ TYPE

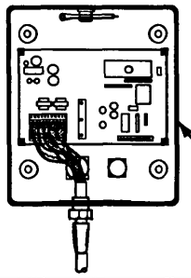

Point

Cover spare holes for cord lock (cable gland) in lower chassis with seals (supplied).

Ⓑ TYPE

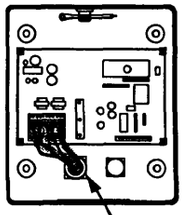

Point

Cover spare holes for cable gland with seals (supplied).

Ⓒ TYPE

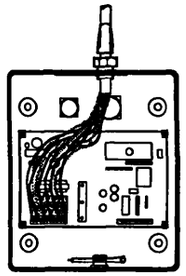

Procedure

①. Disconnect connectors on MAIN Board.
②. Unfasten chassis retaining string
③. Separate upper chassis from lower chassis.
④. Dismount MAIN Board.
⑤. Re-mount MAIN Board upside down.
⑥. Connect connectors to MAIN Board.
⑦. Cover spare holes for cable gland in lower chassis with seals (supplied).

Ⓓ TYPE

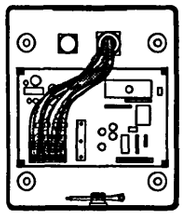

Procedure

①. Disconnect connectors on MAIN Board.
②. Unfasten chassis retaining string
③. Separate upper chassis from lower chassis.
④. Dismount MAIN Board.
⑤. Re-mount MAIN Board upside down.
⑥. Connect connectors to MAIN Board.
⑦. Cover spare holes for cable gland in lower chassis with seals (supplied).

Location of Terminal Opener

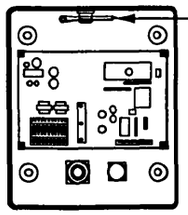

Location of Chassis Retaining String

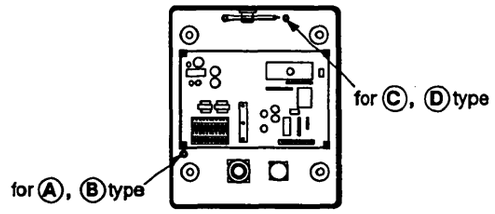

Mounting

1. DISASSEMBLING THE UPPER CHASSIS

①. Disconnect connectors on MAIN Board.
②. Unfasten chassis retaining string
③. Separate upper chassis from lower chassis.

2. BULKHEAD MOUNTING

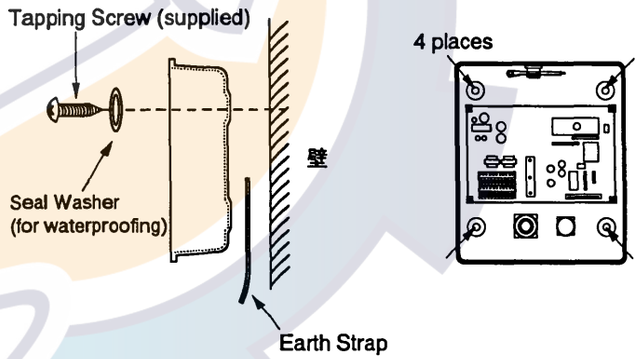

3. PROCESSING OF MIF CABLE

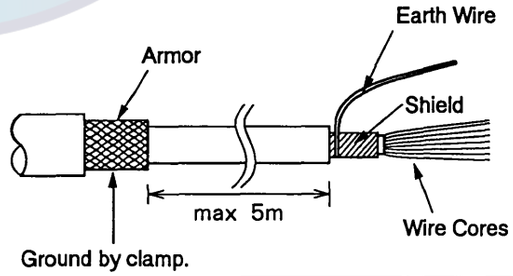

4. FIXING OF MIF CABLE

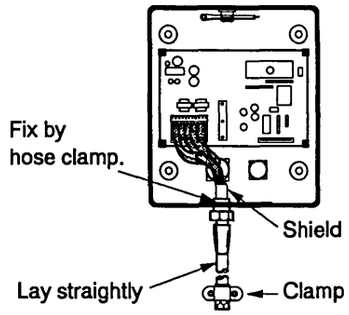

5. TERMINAL BOARD CONNECTIONS

See interconnection diagram.

6. CONNECT CONNECTORS; FIX CHASSIS RETAINING STRING

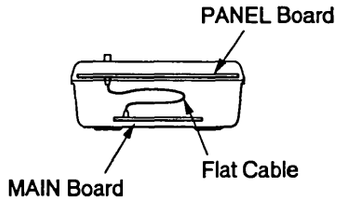

7. FIXING OF COVER

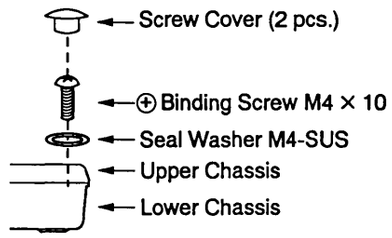

承認 APPROVED	Feb·10·'93 M. IKEDA	名称 TITLE	RB-500/700 INSTALLATION INSTRUCTIONS
検図 CHECKED	Feb·10·'93 M. OSAKO		
製図 DRAWN	Feb·10·'93 T. SAITO	図番 DWG. NO.	C5070-Y01-B

Interconnection and Schematic Diagrams List

Name	Drawing no.	Page
Interconnection Diagram		
FS-5000/8000 + RB-500	—	S-4
FS-5000/8000 + DB-500 + RB-500	—	S-5
RCX + DB-500 + RB-500	C5070-C01	S-6
FS-1562 + DB-500 + RB-500	E5572-C02	S-7
FS-1552 + DB-500 + RB-500	E5549-C02	S-8
10P/13P Cable Connection	C5522-Y01	S-9
Schematic Diagram		
General	C5071-K01	S-10

Connection to FS-5000/8000 (AF board having suffix no. -22 and before)

FS-5000/8000 + RB-500

Replace L4 inductor with a resistor (4.7 ohms/3W). Refer to page ii.

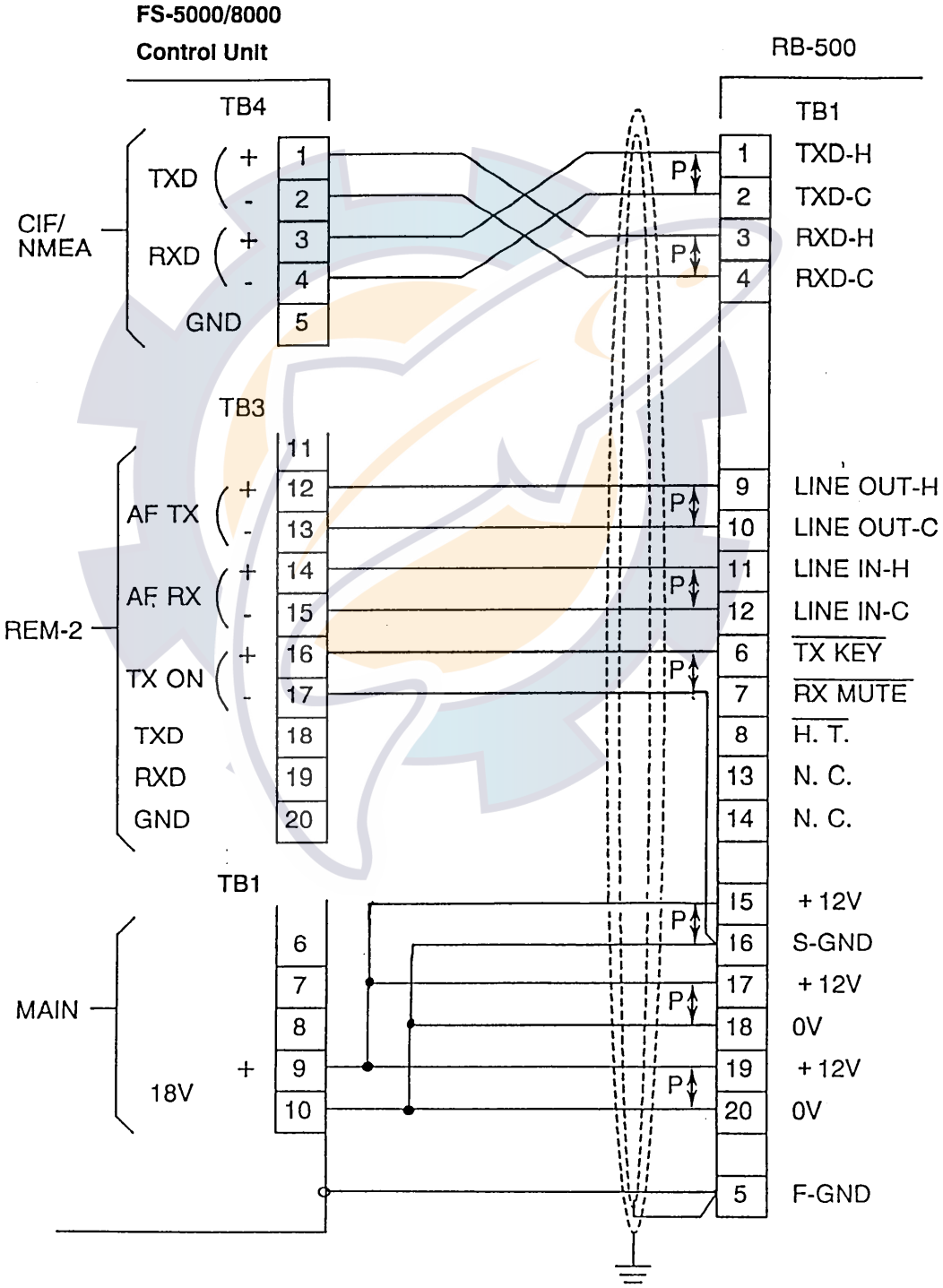

FS-5000/8000 + DB-500 + RB-500

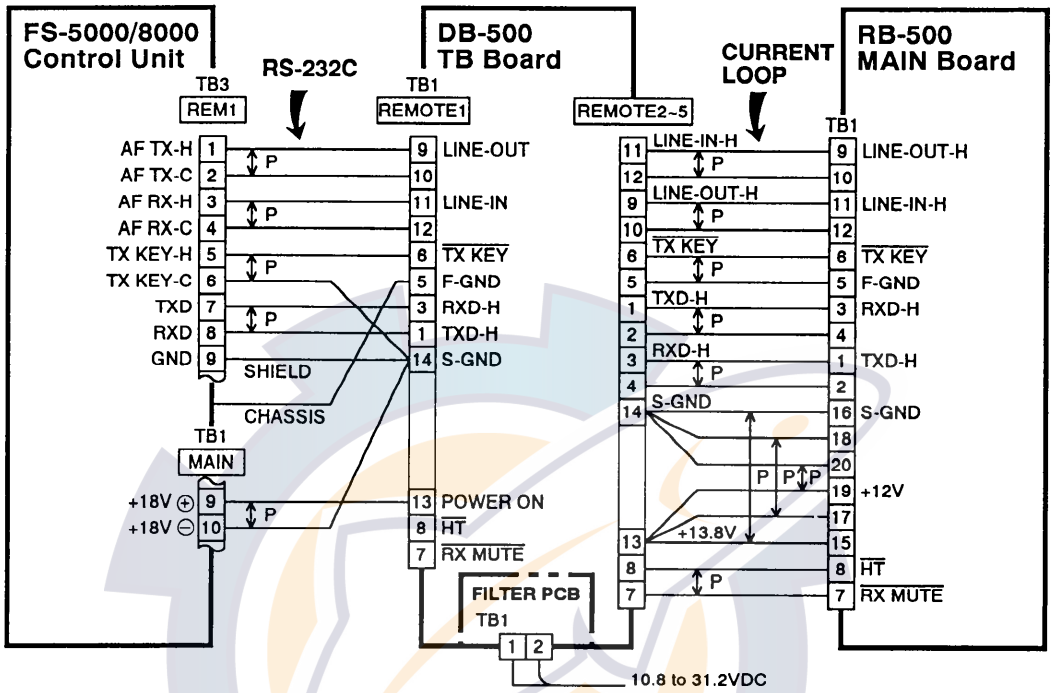

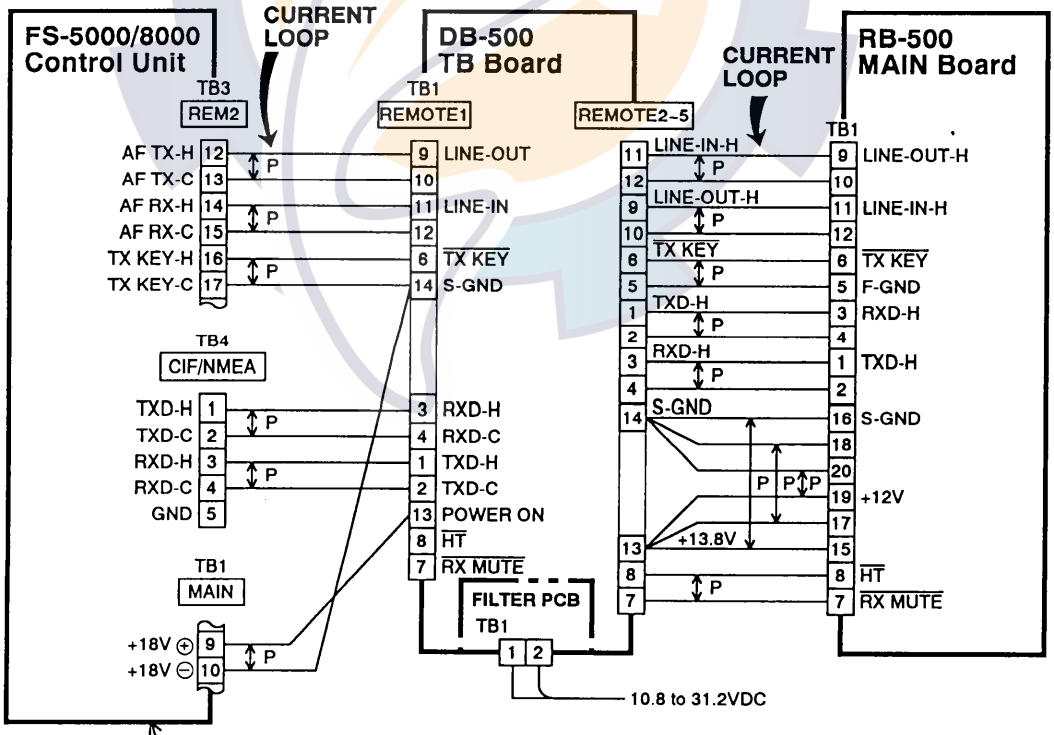

For AF board having suffix number -22 and before (For AF board -33 and after, refer to page S-5.)

Connection to FS-5000/8000 (AF board having suffix no. -33 and after)

FS-5000/8000 + RB-500

Put a jumper wire for current loop format. Refer to page iii.

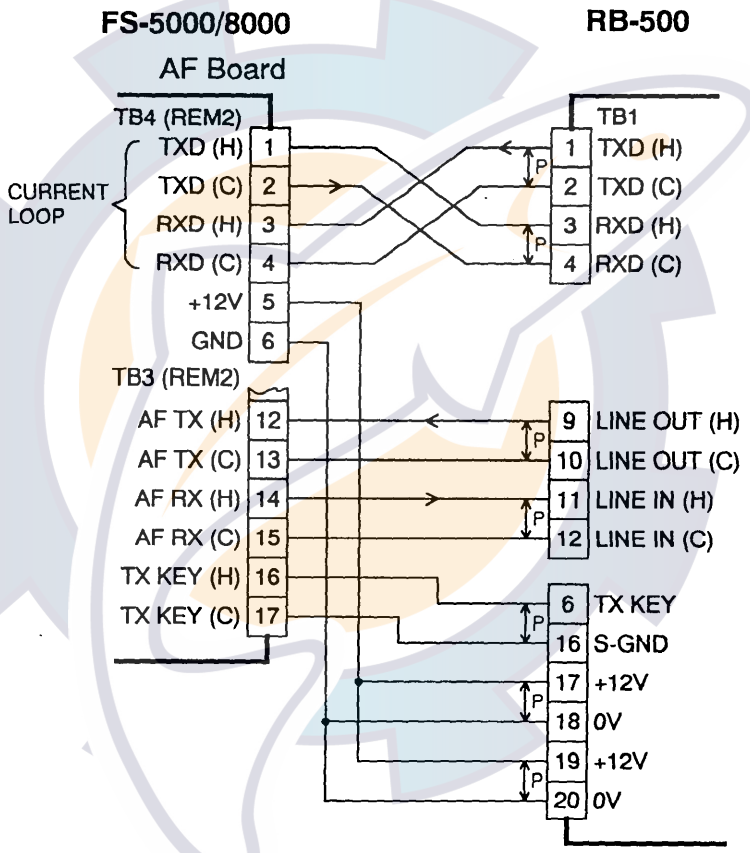

FS-5000/8000 + DB-500 + RB-500

Put a jumper wire only when current loop format is used between FS-5000/8000 and DB-500. For RS-232C format, this modification is not required. Refer to page iii.

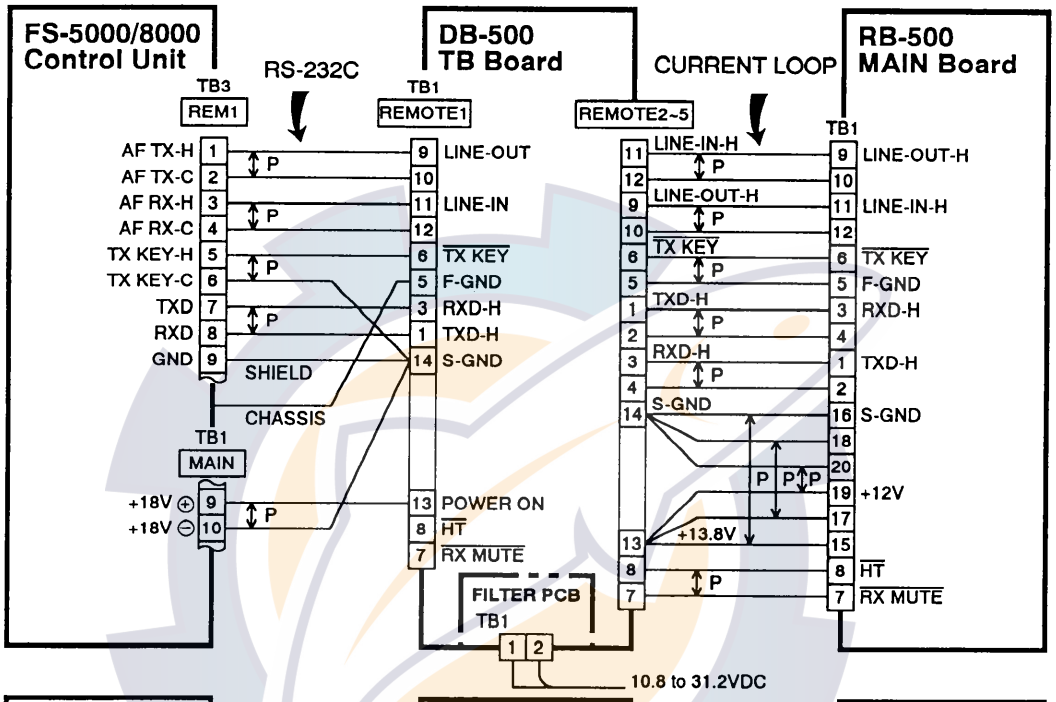

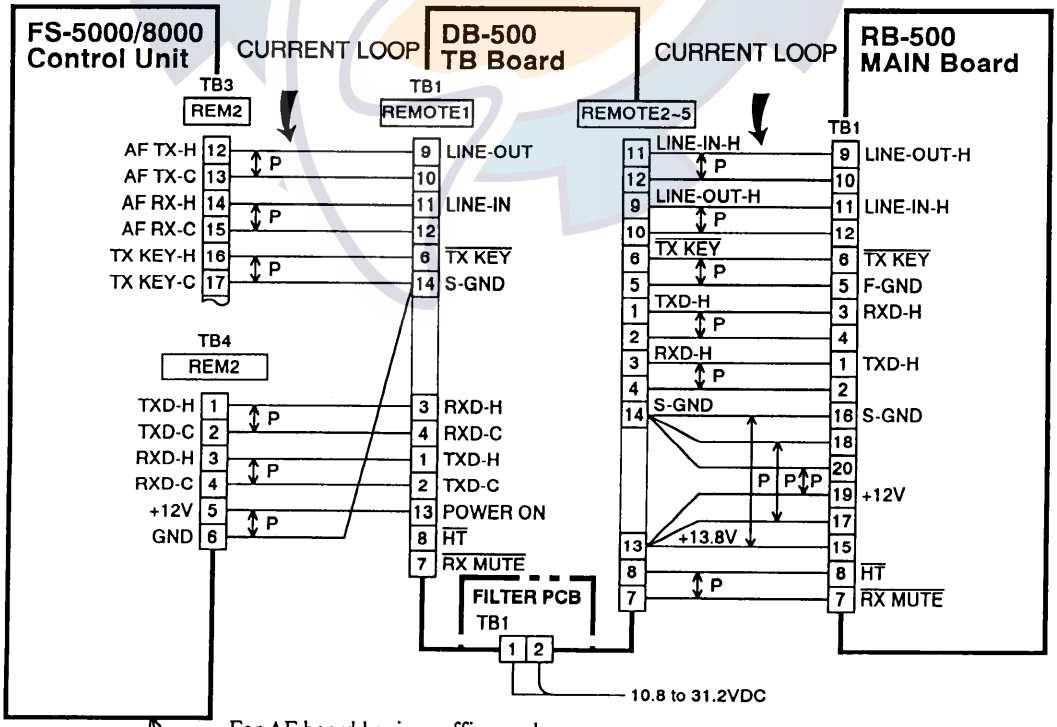

For AF board having suffix number -33 and after (For AF board -22 and before, refer to page S-3.)

FURUNO

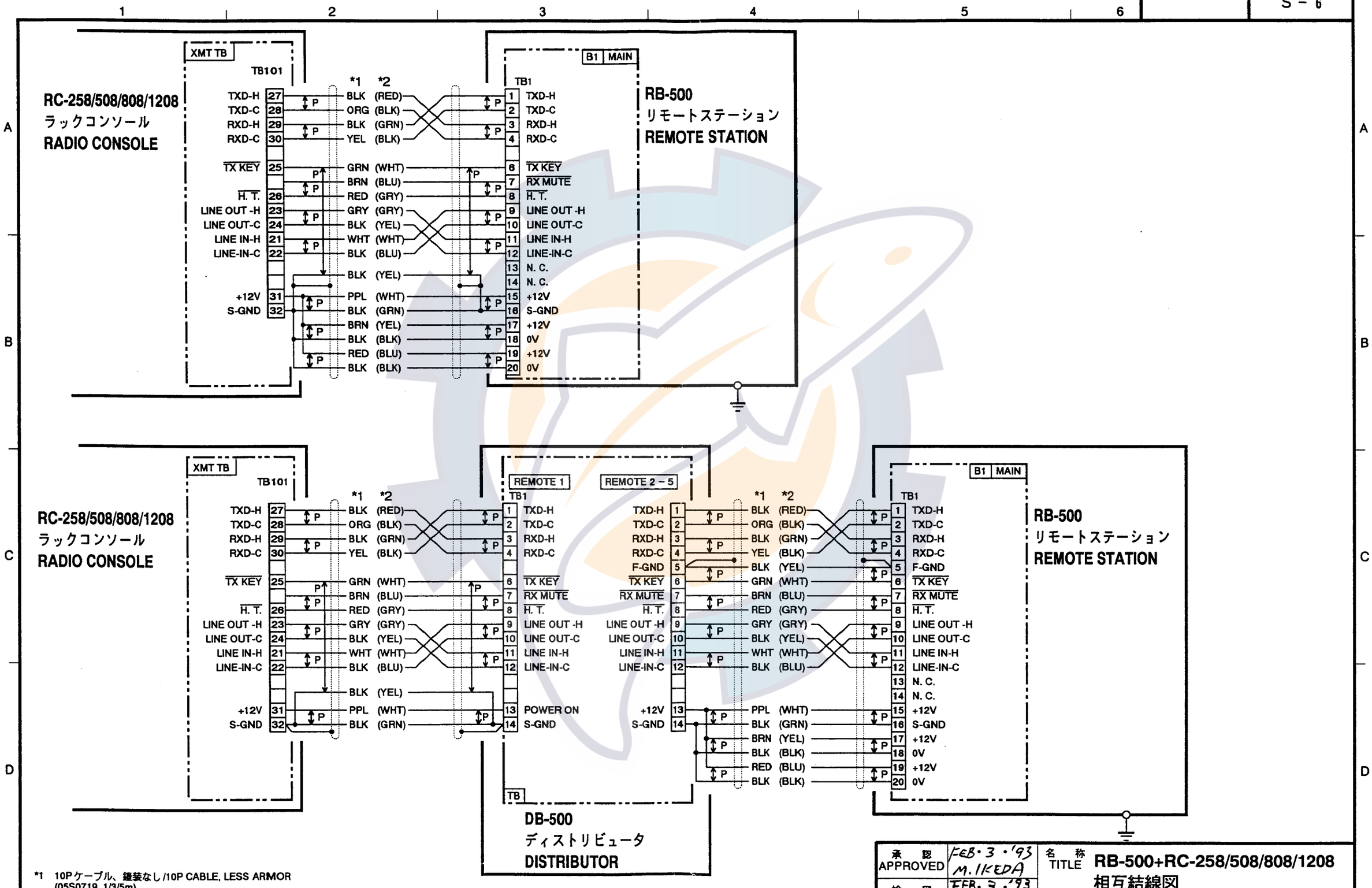

*1 10Pケーブル、鎧装なし /10P CABLE, LESS ARMOR (05S0719, 1/3/5m)

*2 10Pケーブル、鎧装付き /10P CABLE, WITH ARMOR (13S4012, 5/10/20/30/40/50m)

*3 "P" はツイストペア線 / "P" DENOTES TWISTED-PAIR.

承 認 APPROVED	FEB・3・'93 M. IKEDA	名 称 TITLE	RB-500+RC-258/508/808/1208 相互結線図 INTERCONNECTION DIAGRAM
検 図 CHECKED	FEB・3・'93 T. SAITO		
製 図 DRAWN	FEB・3・'93 M. OSAKO	図 番 DWG.NO	C5070-C01-B

FURUNO ELECTRIC CO., LTD.

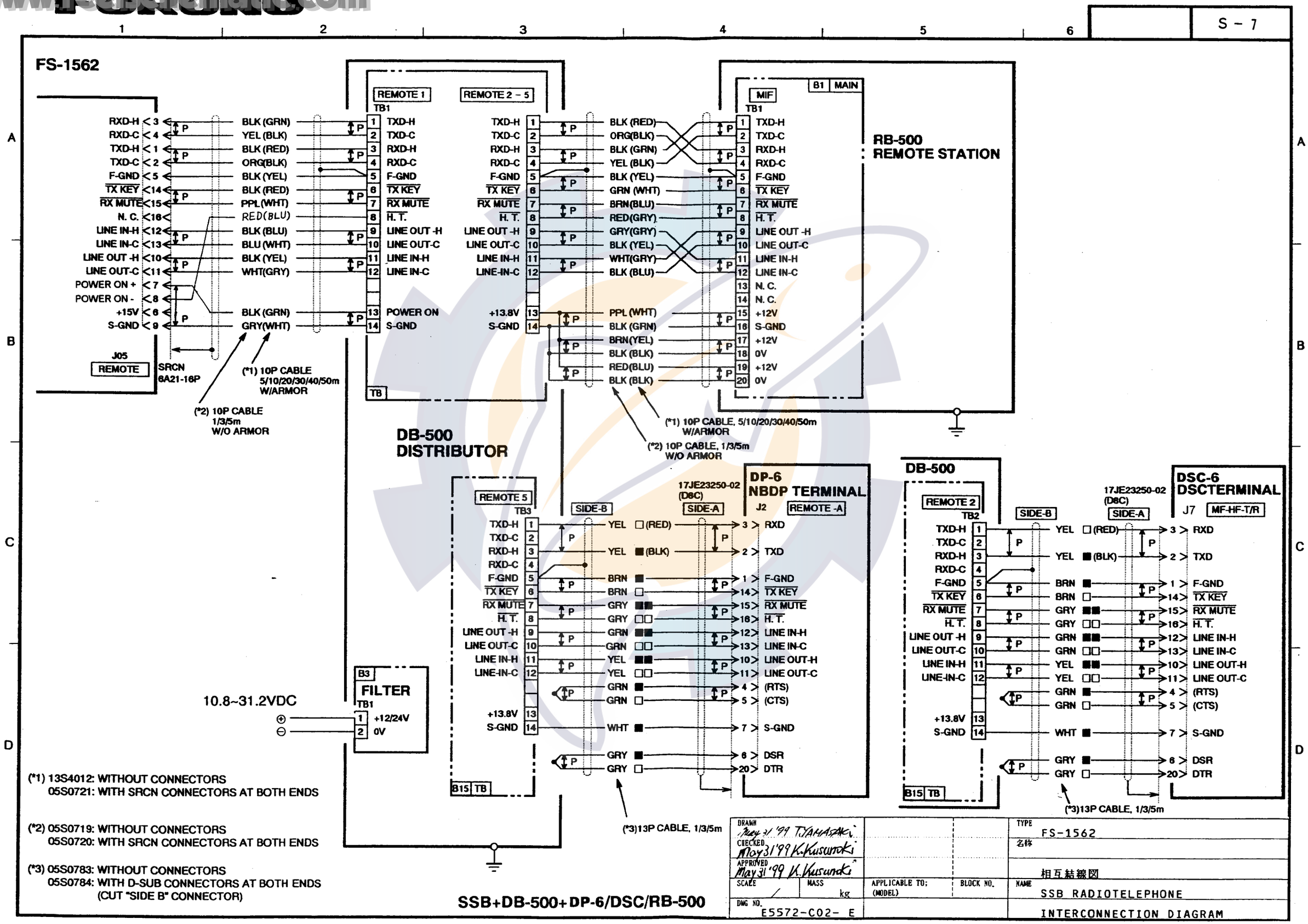

FURUNO

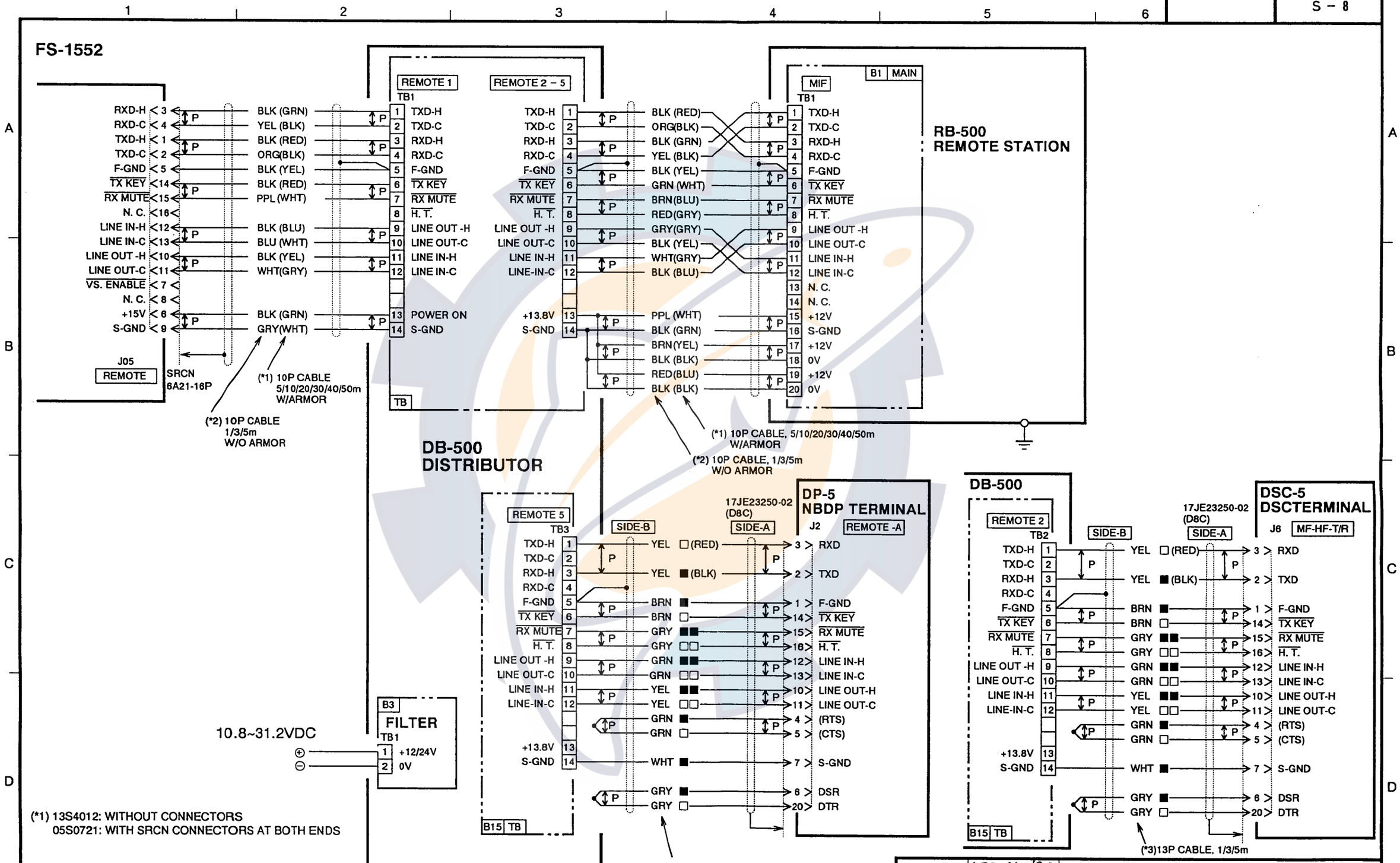

FURUNO

複合13対ケーブル　13P TWISTED PAIR CABLE

Aサイド SIDE "A" (25P:17JE23250－02 (D8C))　　Bサイド SIDE "B"

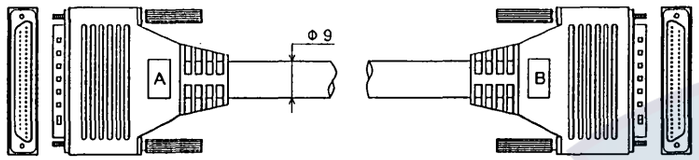

結　線

ペアNo.	"A" サイド ピンNo.	線色	ドットマーク	"B" サイド ピンNo.
①	1	茶	■ 黒	1
	14		□ 赤	14
②	2	黄	■	3
	3		□	2
③	4	若草	■	5
	5		□	4
④	6	灰	■	20
	20		□	6
⑤	7	白	■	7
	7		□	7
⑥	8	茶	■■	8
	9		□□	9
⑦	10	黄	■■	12
	11		□□	13
⑧	12	若草	■■	10
	13		□□	11
⑨	15	灰	■■	15
	16		□□	16
⑩	17	白	■■	17
	18		□□	18
⑪	19	茶	■■■	19
	21		□□□	21
⑫	22	黄	■■■	22
	23		□□□	23
⑬	24	若草	■■■	24
	25		□□□	25

WIRING

Pair No.	Side "A" Pin No.	Wire color	Marking	Side "B" Pin No.
①	1	BRN	■ BLK	1
	14		□ RED	14
②	2	YEL	■	3
	3		□	2
③	4	GRN	■	5
	5		□	4
④	6	GRY	■	20
	20		□	6
⑤	7	WHT	■	7
	7		□	7
⑥	8	BRN	■■	8
	9		□□	9
⑦	10	YEL	■■	12
	11		□□	13
⑧	12	GRN	■■	10
	13		□□	11
⑨	15	GRY	■■	15
	16		□□	16
⑩	17	WHT	■■	17
	18		□□	18
⑪	19	BRN	■■■	19
	21		□□□	21
⑫	22	YEL	■■■	22
	23		□□□	23
⑬	24	GRN	■■■	24
	25		□□□	25

型式/TYPE	ケーブル長/LENGTH	コネクタ/CONNECTORS
05S0783	1m / 3m / 5m	×
05S0784	1m / 3m / 5m	○

(注) シールド線はコネクターでクランプする。
CLAMP SHIELD WITH CONNECTOR HOUSING.

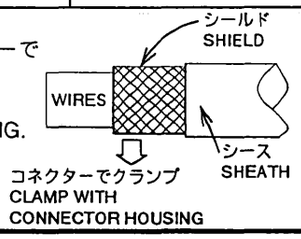

シールド/鎧装の処理
FABRICATION OF SHIELD & ARMOR

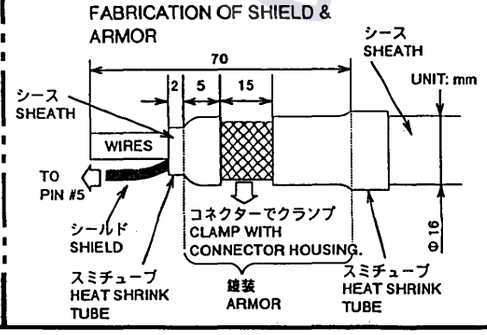

複合10対ケーブル　10P TWISTED PAIR CABLE

Aサイド SIDE "A" (16P:SRCN6A21－16P)　　Bサイド SIDE "B"

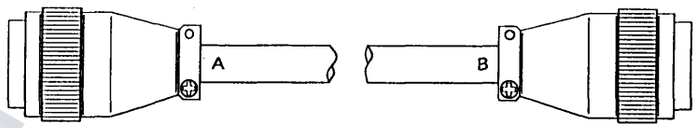

鎧装なしケーブルの時　VINYL SHEATHED CABLE

型名 TYPE	05S0719	05S0720
ケーブル名 CABLE	CO-SPEV-SB-(A) 0.3×10P	CO-SPEV-SB-(A) 0.3×10P
鎧装 ARMOR	×	×
コネクタ CONNECTOR	×	○
ケーブル長 LENGTH	1／3／5m	1／3／5m
ケーブル径 DIAMETER	φ13	φ13

Pair No.	Side "A" Pin No.	Wire Color	Side "B" Pin No.
①	N.C.	黒 BLK	N.C.
	N.C.	茶 BRN	N.C.
②	N.C.	黒 BLK	N.C.
	N.C.	赤 RED	N.C.
③	1	黒 BLK	3
	2	橙 ORG	4
④	3	黒 BLK	1
	4	黄 YEL	2
⑤	5	黒 BLK	5
	6	緑 GRN	6
⑥	12	黒 BLK	10
	13	青 BLU	11
⑦	14	黒 BLK	14
	15	紫 PPL	15
⑧	16	黒 BLK	16
	9	灰 GRY	9
⑨	10	黒 BLK	12
	11	白 WHT	13
⑩	7	茶 BRN	7
	8	赤 RED	8

鎧装ケーブルの時　ARMORED CABLE

型名 TYPE	13S4012	05S0721
ケーブル名 CABLE	CO-SPEVV-SB-C 0.2×10P	CO-SPEVV-SB-C 0.2×10P
鎧装 ARMOR	○	○
コネクタ CONNECTOR	×	○
ケーブル長 LENGTH	5／10／20／30／40／50m	5／10／20／30／40／50m
ケーブル径 DIAMETER	φ16	φ16

Pair No.	Side "A" Pin No.	Wire Color	Side "B" Pin No.
①	N.C.	黄 YEL	N.C.
	N.C.	黒 BLK	N.C.
②	N.C.	青 BLU	N.C.
	N.C.	黒 BLK	N.C.
③	1	赤 RED	3
	2	黒 BLK	4
④	3	緑 GRN	1
	4	黒 BLK	2
⑤	5	黄 YEL	5
	6	白 WHT	6
⑥	12	青 BLU	10
	13	白 WHT	11
⑦	14	赤 RED	14
	15	白 WHT	15
⑧	16	緑 GRN	16
	9	白 WHT	9
⑨	10	黄 YEL	12
	11	灰 GRY	13
⑩	7	青 BLU	7
	8	灰 GRY	8

DSC-5 SERIES, DMC-5, AA-50(R), DP-5

REVISION 91/9

承認 APPROVED	FEB・25・91 T.NAKANO	名称 TITLE	10対／13対 ケーブル接続図 10P/13P CABLE FABRICATION
検図 CHECKED	FEB・25・91 M.IKEDA		
製図 DRAWN	FEB・25・91 T.SAITO	図番 DWG.NO.	C5522-Y01-C

FURUNO ELECTRIC CO., LTD.

FURUNO

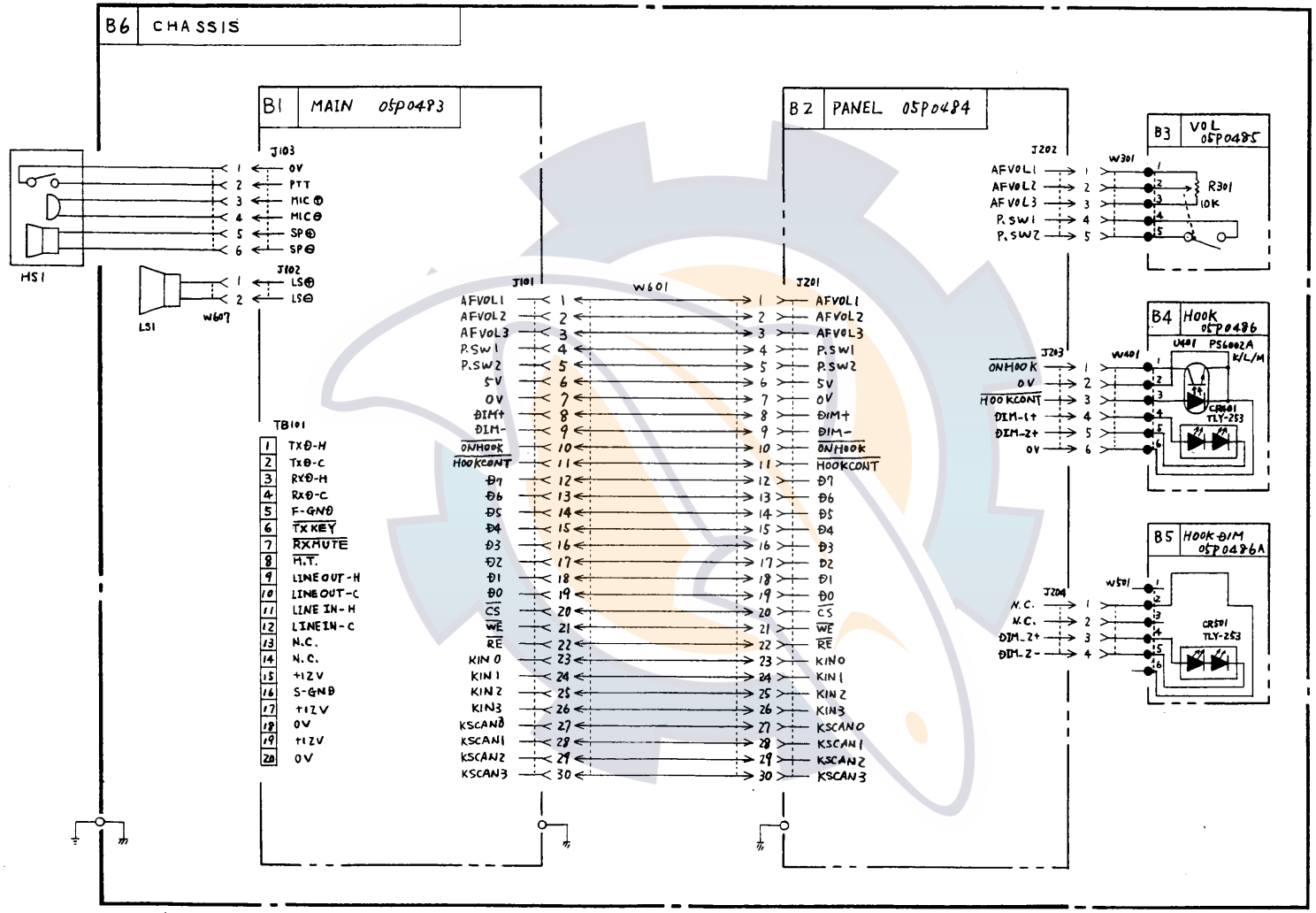

注意 :抵抗の単位はΩ。
RESISTANCE IN OHMS.

RB-500/700

承認 APPROVED	Nov.13.91 T.AKAI	名称 TITLE	総合回路図 RB-500/700 GENERAL SCHEMATIC DIAGRAM
検図 CHECKED	Nov.13.91 M.IKEDA		
製図 DRAWN	Nov.13.91 M.OSAKO	図番 DWG.NO.	C5071-K01-B

FURUNO ELECTRIC CO., LTD.